1988-90 GM-R/V SERIES WIRING SCHEMATIC

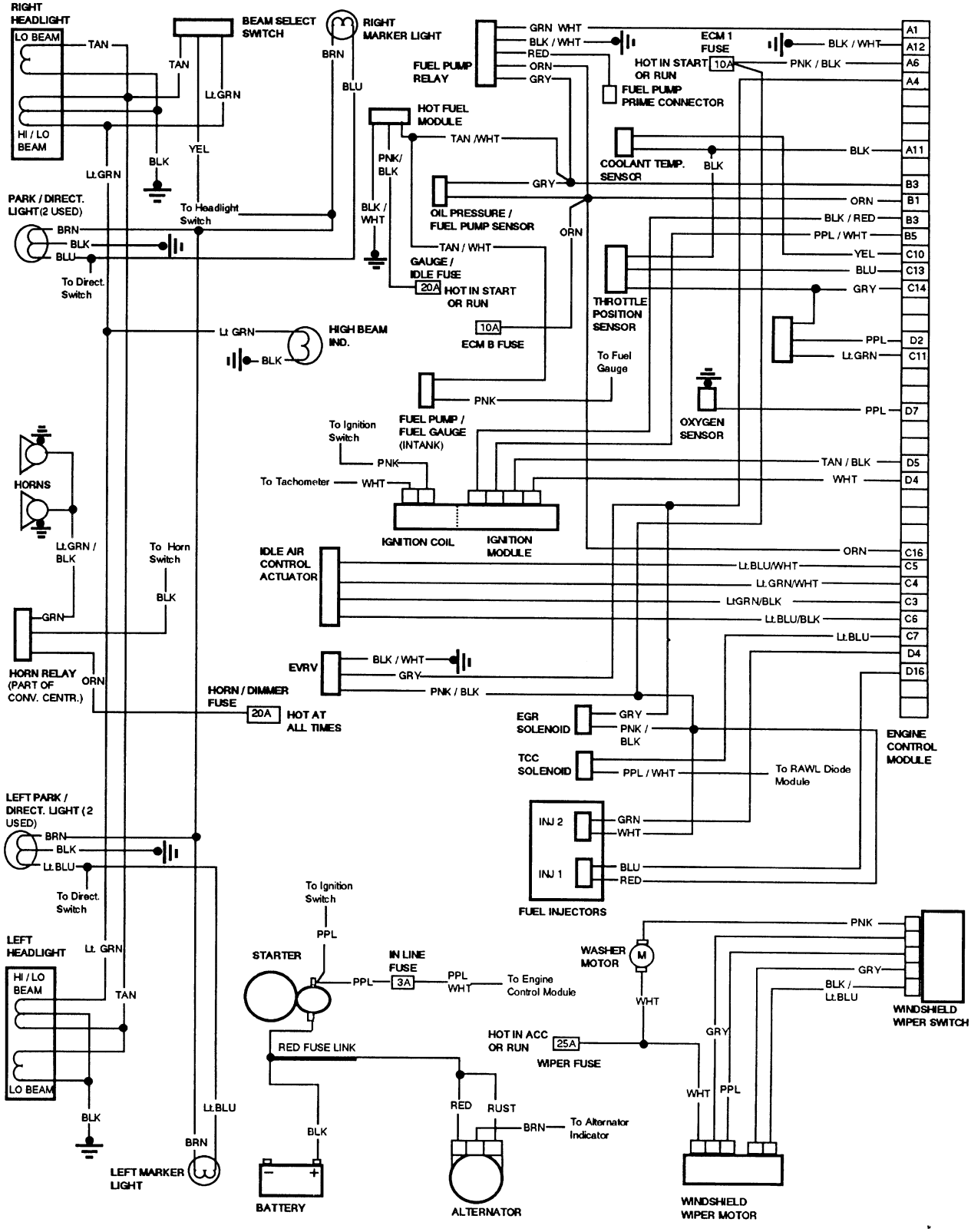

DIAGRAM 5